AIRIVO 3D Galaxy Projector

Instruction manual

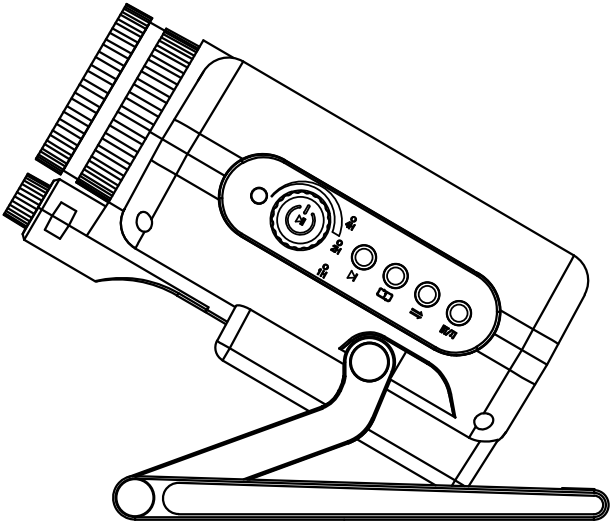

Model:3D02

Unpacking and Inspection

Thank you for purchasing our products, please read the instruction manual carefully before use, which contains important safety recommendations and instructions for use, please follow the instruction manual to avoid damage to the product due to misuse. When you receive the product, please check for any damage.

Packing list:

Main unit x1
Remote control x1
Power adapter x1
Instruction manual x1

Warning:

The power supply requirement for this product is DC19V / 1.894A. Once the power adapter is out of this range, please use a regulator device, otherwise its service life will be affected or the product will be damaged!

Product usage diagram

1. Plug the included power adapter into the power input port.
2. The product can be adjusted to the projection angle, as shown in the following figure.
3. You can rotate the "Projection Focus Wheel" to adjust the sharpness of the screen.

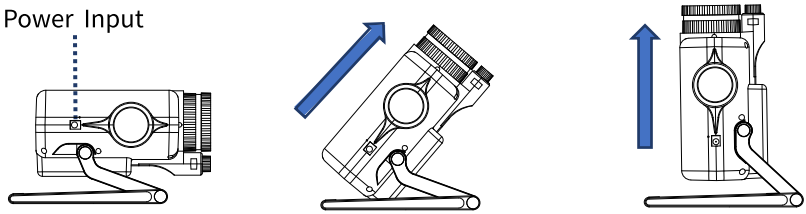

Product Function Button Diagram

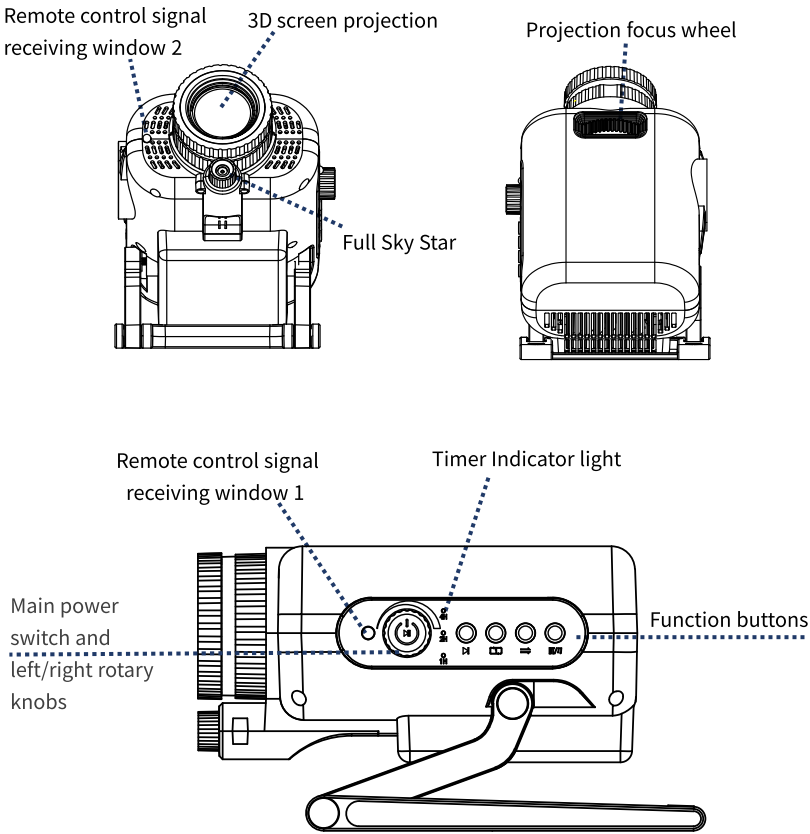

Product key function operation description



Multi-function switch

Short Press: Turn the device ON / Play or Pause when powered on
Long Press: Turn the device OFF
Rotary Control: Turn clockwise to increase volume, counterclockwise to decrease volume.



Next scene
Switch the next video scene



Loop Playback
Single video loop playback



Sequential playback
Sequential playback of all videos



Built-in Audio/Bluetooth
Press the button to switching (Bluetooth/built-in music), a prompt tone sounds when switching to Bluetooth mode.

Note: **By default, this product will automatically shut down after 4 hours of continuous operation!**

Remote control function button description:

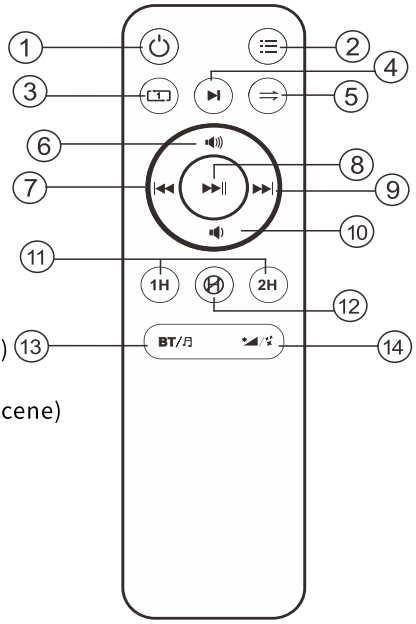

① Power On/Off

② Menu On/Off

③ Single video loop playback

④ Switch the next video

⑤ Sequential playback of all videos

⑥ Volume + (Menu Mode: Previous Scene)

⑦ Previous Song(Menu Mode: Previous Scene)

⑧ Pause / Play

⑨ Next Song(Menu Mode: Next Scene)

⑩ Volume-(Menu Mode: Next Scene)

⑪ Set timer for 1 hour / 2 hours auto shutdown

⑫ Cancel the set timer

⑬ Bluetooth audio / Built-in audio mode switching

⑭ **Short press to** adjust backlight brightness /
Long press to turn on & off green star

Specification:

Power adapter input: AC 110V-240V, 50Hz-60Hz
Product power supply input: DC19V / 1.894A
Operating Temperature: 32°F~104°F (0°C~40°C)
Projection area: 161~538 square feet (15~50 square meters)
Product Size: 206*135*96mm
Bluetooth Model: 3D02
3D Projection Distance: 2-3 meters

Safety Guidelines:

- Avoid looking directly at the laser lens
- Indoor use only
- Avoid water & humidity
- Clean lens with soft,dry cloth
- Do not disassemble
- Due to technical reasons,the machine may generate noise during operation. If used it during sleep,please position it at a distance.

Statement:

1. The light source of this fixture is a non-replaceable light source, when the light source reaches the end of life, the entire fixture should be replaced.
2. This product has been thoroughly and rigorously tested before leaving the factory, and users should strictly observe the warnings and instructions. Incorrect use may cause damage to the product, which is not covered by the company's warranty.
3. Do not stare directly at the operating light source when powered on.

◆AFTER-SALES SERVICE

We'd like to address any issues or concerns you have.Your suggestion is important to us so please contact us if you have any problems.
You can activate 1-yearwarranty and contact us by email!
Email: **airivo@outlook.com**